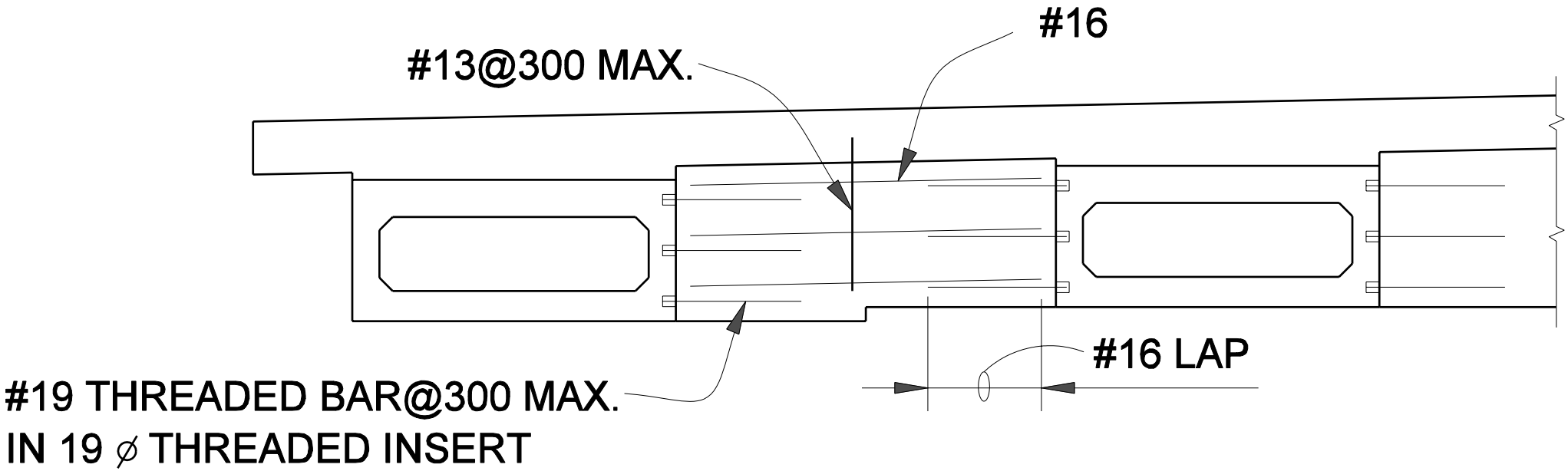

BOX BEAM DIAPHRAGM
AT PIER
Figure 63-16K